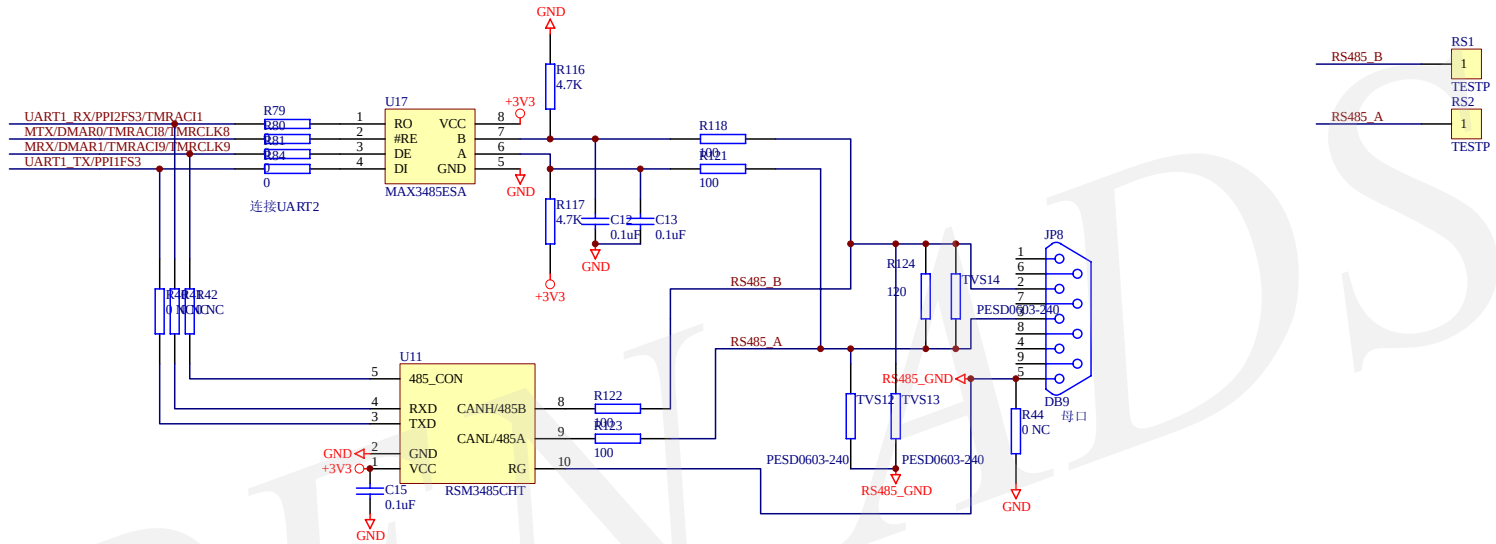

Pin 15

Title	
Size	A4
Date:	
File:	

OPEN ADSP